USER MANUAL

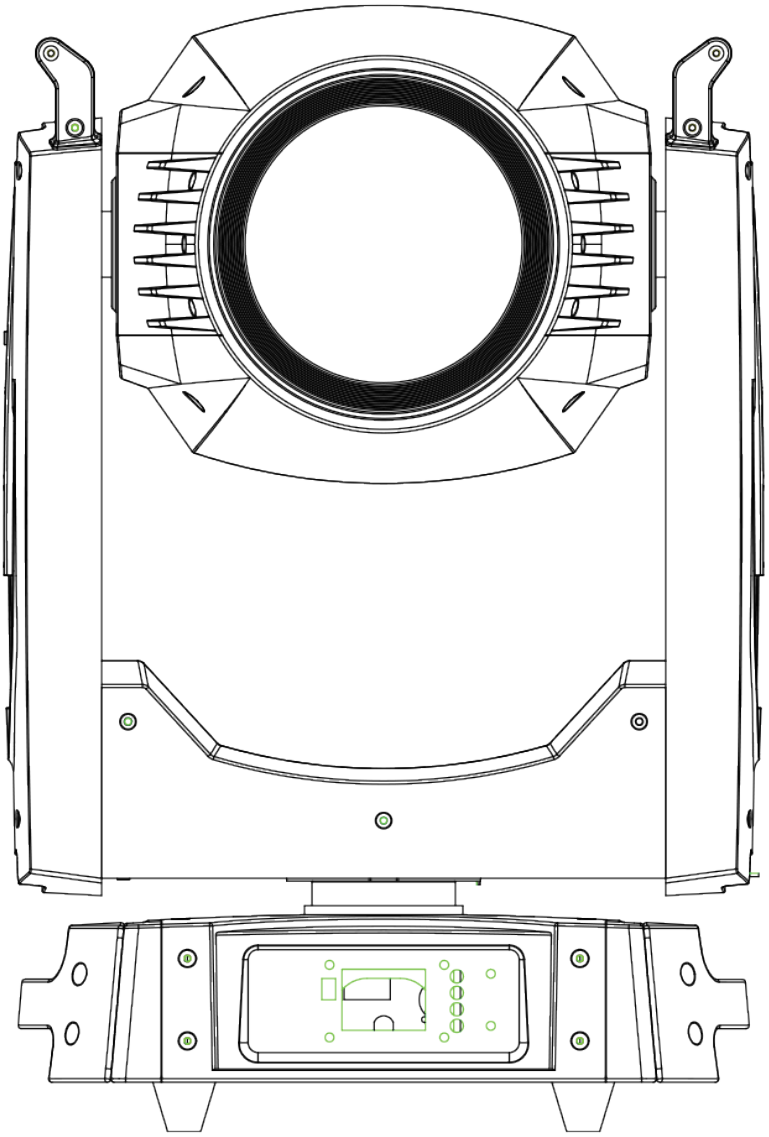

LED SPOT PROFILE 1200W

Foreword

Thank you for choosing the 1200W Framing 4 IN 1 series of products. This moving head light is the latest high-quality beam light independently developed by our company. It is lighter and more convenient in the same power. It has the characteristics of perfect combination of international advanced electronic control technology and excellent humanized industrial design. The product fully complies with CE standards and supports international DMX512 signal control mode.

1200W Framing 4 IN 1, using LED module light source, strong light effect, 6 replaceable and self-rotating glass gobos, clear gobo, 5 static gobos + 2 open, XY axis running fast and stable, precise positioning, 6 color pieces + high CRI, high standard color wheel, color is pure and uniform. Independent linear CMY system and independent CTO system can mix colors arbitrarily and switch quickly, standard 4-facet prism effect, prism pattern is clearly visible, creating more dreamy effects for the stage, standard moderate frost effect, frost spot can be linearly zoomed, edge overlap without overlapping shadows.Independent animation wheel linear insertion，it can achieve infinite rotation effect.

1200W Framing 4 IN 1 has super high and ultra-long range, framing system: 4 blades achieve fast and smooth framing, each blade cutting direction and angle can be independently controlled; the entire framing module can rotate ±90°

1200W Framing 4 IN 1 is widely used in various professional places such as TV stations, large gymnasiums, disco, dance halls, nightclubs, large performances, etc.

Product Catalog

1: Safety Instructions ----------03

2: Technical Parameters----------04-05

3: Schematic Lighting Components----------05

4: Packing ----------06-07

5: Safety Standards ----------07-10

6: Ac Power ----------10-11

7: Light Source ----------11

8: Function Description----------11-12

9: Display Setting ----------13-23

10: Dmx Protocol ----------24-29

11: Trouble Shooting----------29-30

12: Cleaning----------30

13: Photometrics Diagram----------31

1. Safety Instructions

◇ Before using this product, please inspect carefully the product is not unwrapped or damaged during transportation. If there is any damage during transportation, please do not use the lights first, and contact with the dealer or manufacturer for further information.

◇ Before running products, ensure that the voltage and Hertz in accordance with the requirements of lights.

◇ It' s very important to connect ground wire to avoid the electric shock。

◇ This product is for dry indoor environment ONLY.

◇ This product must be installed on the sufficient space, adjacent to interface the shortest distance of 50 cm, to ensure that the lights will not crash each other。

◇ Before moving or repairing the product , please unplug the power.

◇ When it working, ensure that no inflammable and explosive near objects.

◇ When installing this product, please use the safety rope. When handling this product, lift the armrest base, rather than the lamp body.

◇ This product is suitable for a maximum temperature of 40 degrees Celsius, when the surrounding environment is higher than 40 degrees Celsius, please do not use this product.

◇ Do not touch the fixture when it is working.

◇ If there is any problem with the operation during the performance, the lamp should be stopped immediately. Please do not perform repairs without authorization, as repairs may easily cause damage or cause other malfunctions. Please contact the company's maintenance point for repair. During the repair process, please use accessories of the same model.

◇ Please read this instruction manual carefully, especially the installation, use and maintenance sections.

Importantly, the lamp must be transported in an anti-shock protective carton or flight case.

2. Technical Parameters

◇ Number of DMX channels: 39 channels
◇ Operation mode: DMX512 mode, RDM, etc.
◇ LCD LED display + button control
◇ 1200W white LED module, lifespan:20,000 hours
◇ Pan movement: 540° , Tilt movement: 270° , automatic position correction。3 phase mute sound motor, 16 bit
◇ Color temperature:7800K
◇ Color wheel: 6 color + high CRI film + open
◇ Static gobo wheel: 5 gobo + 2 open
◇ Glass gobo wheel: 6 replaceable rotating glass gobo +open,
◇ Glass gobo size: image diameter 23 mm, outside diameter: 28 mm, thickness: 1.1 mm
◇ Framing system: 4 blades, each with separate movement and full blackout, smooth with variable speed, fast for creating mid-air effects, the blades can be precisely positioned, ± 90° of the complete framing system, 180° rotation angle
◇ Iris:fast electric iris, linear spot zoom from 5% to 100%, with macro function and multi-effect changes
◇ Prism: high-definition 4-prism effect
◇ CMY & CTO:Independent CMY linear color mixing and CTO linear color temperature system can achievE 6500K-3200K linear adjustment.
◇ Optical lens: high-precision cemented optical lens
◇ Soft light effect: The spot angle of the soft light can be adjusted linearly
◇ Focus: linear focus
◇ Dimming: 0-100% linear adjustment
◇ Beam angle: 5-50°
◇ Strobe: electronic strobe (0.5-20 times/second)
◇ Housing: made of 5052 aluminum for good heat dissipation, high-quality nylon + glass fiber material (V0 level flame retardant and waterproof), ensuring that the fixture can withstand high temperature, low temperature and ultra-high level fire protection
◇ Rated power: 1400W
◇ Protection level: IP20
◇ Net weight: 46KG ; Dimension: 326* 461 * 878mm

LED SPOT PROFILE 1200W

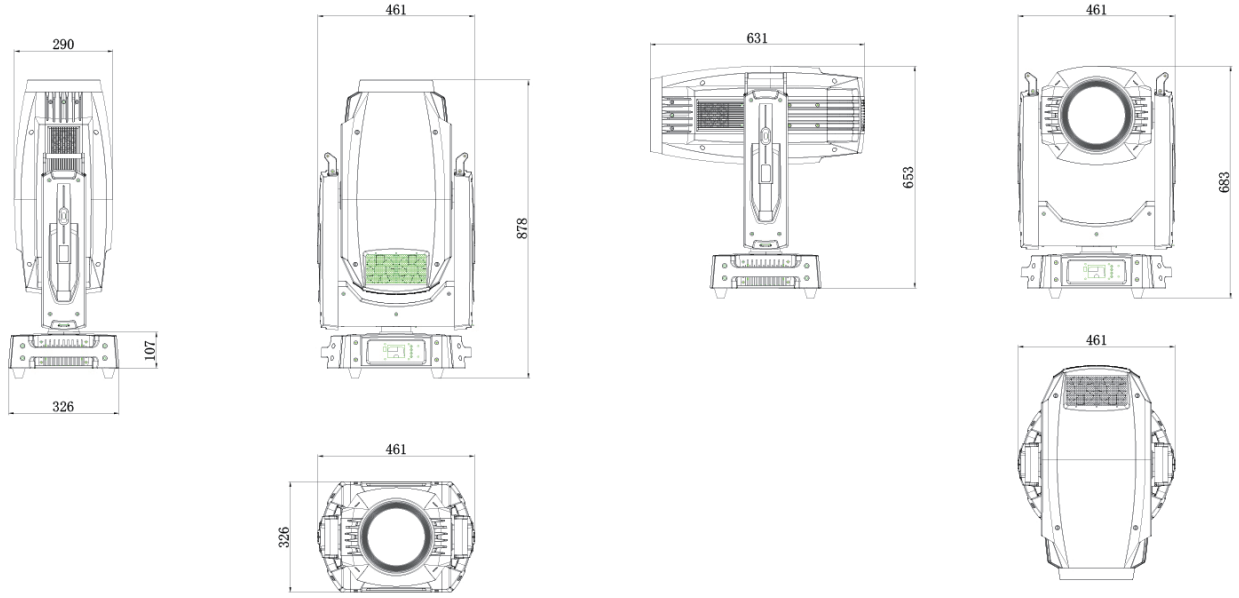

3. Lighting Components

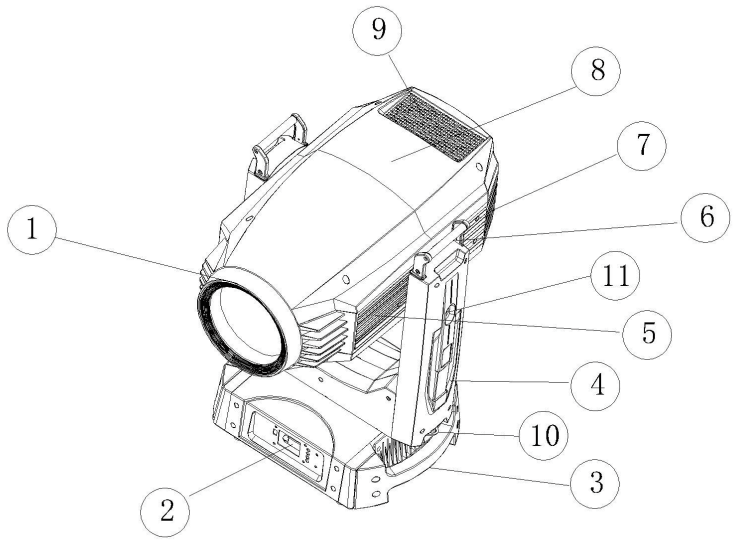

1.Lens front cover
2. Lamp body cover
3. Arm cover
4. Arm cover
5.Body upside cover
6.Arm handle
7. Body downside cover
8. Body cover
9. Heat dissipation high density iron mesh
10. Pan left and right zipper
11. Tilt left and right zipper

4. Packing

4.1 Packing Material and Accessories

The fixture is packaged by carton or standard 1-in-1 flight case , accessories are as below:

Item	Quantity	Unit
User Manual	1	Piece
Signal Line	1	Piece
Safety Rope	1	Piece
Bracket+ Clamp	2	Piece
Power Cable	1	Piece

4.2 Protection Lock for Transport

For the convenience of transportation, the light has 2 protection locks (Each of it is on
the X-axis and Y-axis.). There are 4 locked buttons on the X-axis and 3 locked buttons on the Y-axis to lock the light' s position. The lock position is locked at the center and the light body is in a vertical position with the arm.

4.3 Packing

1. Power off to let the lamp cool completely before packaging at least 15 minutes or more
2. Lock the light protection locks when cleaning the surface of the light.
3. Use the packing bag to cover the light, grab the handle on both sides of the equipment and put it upside down and put it into the box gently.
4. Put the light' s accessories into packing box after putting the light into the box.
5. It' s only up to two crates stacked and is prohibited upside down.

4.4 Unpacking

1. Open the packing box and packing bag
2. Grab the equipment' s handles, lifting and carrying away the light from the packing box or opening the flight case cover placing lift boom close to the light base, then equipping light hook on light base bottom tightening quick Install locks. At last rising away boom to the top of the lamp from flight case, put the flight case away.
3. Unlock the light protection lock before turning on the light

Note: Upon receipt of light, please check if there is damage to the light caused by transport, please do not use the fixture if any damage, and contact us as soon as possible.

5. Safety Standards

Please kindly be notified that You should ensure that light and installation materials are checked regularly. Please do not install it by yourself if you do not have the professional work condition and
similar experience. Please ask the professionals to operate it. Incorrect installation will cause danger.

The working temperature for the equipment is available between minus 20 degree and 40 degrees Celsius. Do not use the equipment outside of this environment. Don' t stand under the light when the light is installed, dismantled, moved or serviced. The operator must ensure that the fixtures are securely connected. Installing the light after professionals approving electrical parameters make sure that these installation must be checked at least once per year by experts.

5.1 Hook Installation

The equipment can be placed on the stage or on a stand in any direction, quick lock system can quickly and easily remove or install a light hook

Note:The lamp has been installed with a folding lamp hook. When in use, the folding lamp hook is erected and a rotatable folding lamp hook can be rotated so that the hanging sides of the lamp hook are in the same direction.

5.2 Fixing Equipment

1. Please confirm the rigging equipment is not damaged and can bear at least 10 times of light' s weight before installing. Also check the building can be bore at least 10 times of total weights of light, fixture, and cable accessories.

2.If truss can be lifted the equipment can be directly clamped from flight case and locked fixture base. Then hung on the light and fixed it. Before rising the light to right height, connect the power line and signal line.

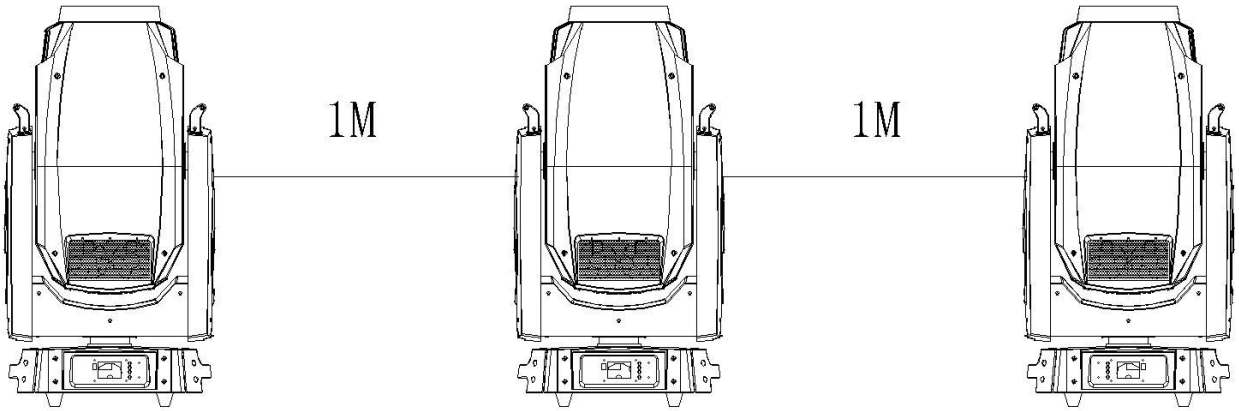

Note: Lights be placed vertically upward, the shortest distance between working lights must be more than or equal 900mm, lighting installation layout as above photo.

5.3 Data Cable Connect

Data cable is DMX512 signal.
Note: Signal line connections is X-type connector.
X-type connector --- If the external flexible cable or cord of this light is damaged, please replace the professional cable or cord from the manufacture or its agent.
DMX of lights input and output connects to a 3&5-pin XLR,
1. first pin is grounded.
2. second negative signal is second pin.
3. third pin connects to the positive polarity signal.
4. empty.
5. empty.
In order to prevent reception reflection and interference control signal, a terminal plug must be installed on the first branch of the connected device last 3-pin output jack.

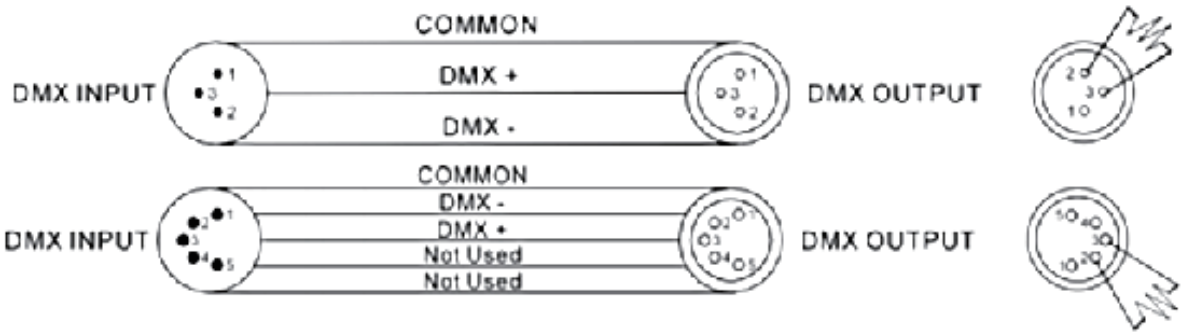

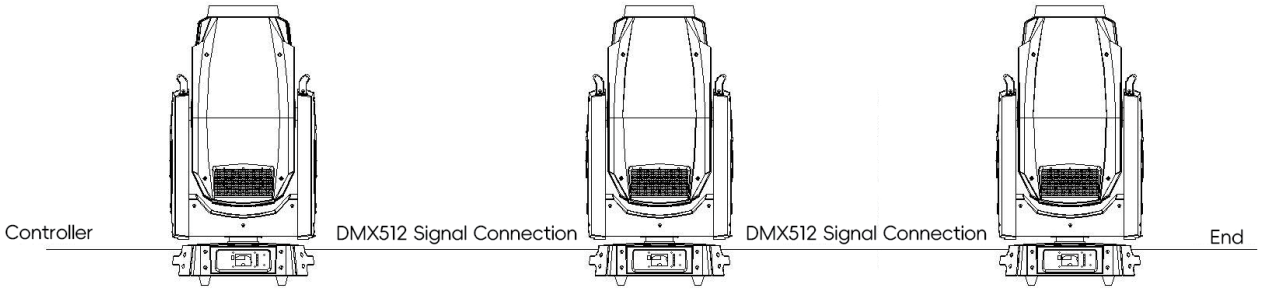

The controller connects to the nearest input XLR 3-pin, then from the output of the device connects to the input of the next device, continuous connection one by one, the final output data cable terminal equipment plug one end into the terminal.

Note:
Please use two output separation connections, if you want to separate the continuous connection branches, you must use a DMX512 signal amplifier to separate them..
2.Please use a shielded twisted pair cable that is specifically configured for DMX512. Standard amplifier cables cannot reliably control data over long distances..

6. AC Power

6.1 Fuse

The power supply and fuse configurations are as follows:

Power Supply：
100-240v~ 12A

Fuse：
5*20 Main Fuse

6.2 Power Connection

If the external flexible cable or cord of this light is damaged, the line is up to the manufacturer or its service agent or a similar qualified person to replace, in order to avoid danger.
Connect the power supply personnel must have the appropriate qualifications before proceeding, you must make sure you are using the power supply voltage matches the voltage identified and have overload or leakage protection. Directly connect the device to the power supply, do not connect to the silicon box dimming system, otherwise damage to the equipment.

7. Light Source

7.1 Light source specification

1200 led framing light uses LED module, which provides a very stable color temperature at 7800K, color rendering index greater than 70, and an average life of more than 20,000 hours (depending on the use environment of the lamp)
Note:
1. Please do not install other similar modules, otherwise it will cause safety hazards or damage the equipment.
2. To reduce the risk of damaging the lamp, replace the bulb before the service life of the bulb is exceeded.
3. Do not use scratched and damaged LED light sources

8. Function Description

8.1 Optical lens focusing

Two high-precision screw motors work synchronously to adjust the optical lens to achieve the clarity of the light spot.
8.2 Dimming and strobe

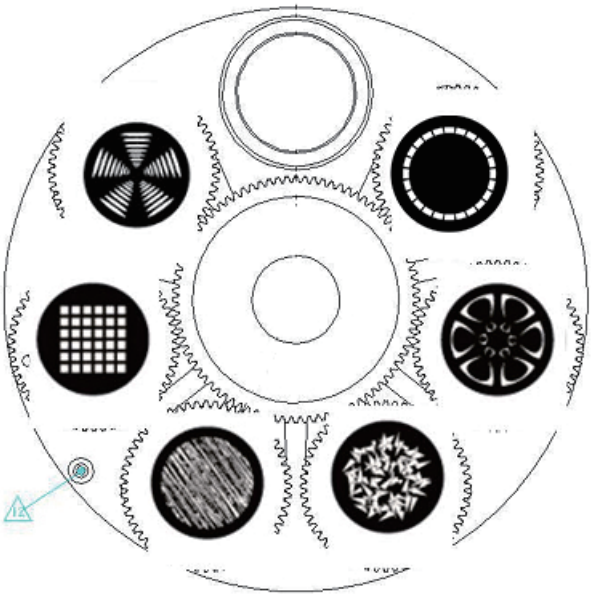

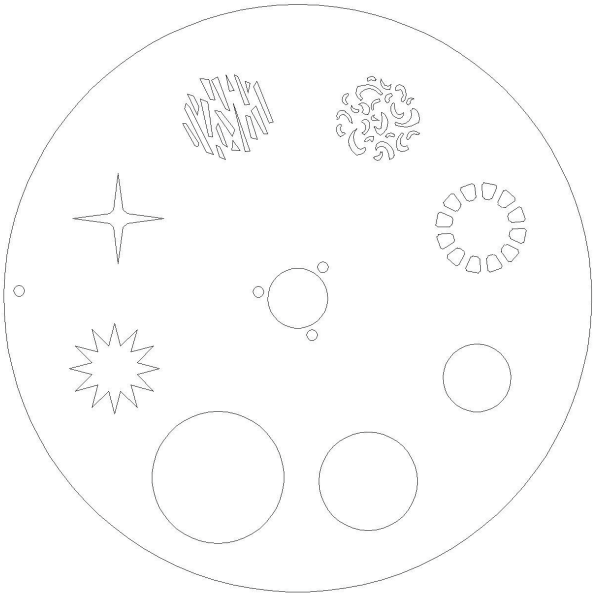

Rotating Gobo Wheel

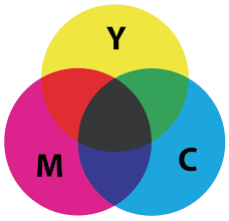

8.2 Dimming and strobe

0-100% electronic dimming, instant on and off, strobe speed can be adjusted at will, up to 20 times/second, and comes with a special function of random strobe.

8.3 Horizontal and vertical scanning

Horizontal scanning 540 degrees, vertical scanning 270 degrees, both equipped with XY axis magnetic encoders, with 16BIT precise positioning function. Horizontal and vertical speeds are adjustable.

9. Display Setting

9.1 Display panel introduction

9.2/Menu Operation:

Button		
ESC Enter up down		
1.DMXAddress：00-512		
2.Channel：39		
3.Reset	Motor power supply	ON/OFF
	XY	ON/OFF
	Color	ON/OFF
	Gobo	ON/OFF
	Light Road	ON/OFF
4.Operation	DMX//AUTO/USER	
5.Manual Control	X	0-255
	Y	0-255
	XY Speed	0-255
	Strobe	0-255
	Dimmer	0-255
	Color	0-255
	Rotating Gobo Wheel	0-255
	Rotating Gobo	0-255
	Framing 01	0-255
	Framing 02	0-255
	Framing03	0-255
	Framing 04	0-255
	Framing05	0-255
	Framing06	0-255
	Framing07	0-255
	Framing08	0-255
	Framing Disc Rotating	0-255
	Iris	0-255
	Focus	0-255
	Zoom	0-255

6.Operation Setting	Master& Slave Mode		Master/Slave	
	XY Setting	1. Manual Scanning Yes/No	1. Manual Scanning Yes/No	
		2. X Reverse Yes/No	2. X Direction Yes/No	
		3. Y Reverse Yes/No	3. Y Reverse Yes/No	
		4. Speed channel real-time Yes/No	4. Speed channel real-time Yes/No	
	Dimming curve	Linear/Square/Square Root/S Curve/Logarithmic		
	Self-Programming	Manual Editing	Step01	Time：0-255
				Channel 1:0-255
				Channel 2:0-255
				Channel 3:0-255
				Channel 4:0-255
				Channel 5:0-255
				Channel 6:0-255
				Channel 7:0-255
				Channel8:0-255
				Channel 9:0-255
				Channel 10:0-255
				Channel 11:0-255
				Channel 12:0-255
				Channel 13:0-255
				Channel 14:0-255
				Channel15:0-255
				Channel 16:0-255
				Channel 17:0-255
				Channel 18:0-255
				Channel 19:0-255
				Channel 20:0-255
				Channel 21:0-255
				Channel 22:0-255
				Channel 23:0-255
				Channel 24:0-255
				Channel 25:0-255
			Step 02	Time：0-255
				Channel 1:0-255
				Channel 2:0-255
				Channel 3:0-255

6.Operation Setting	Self-Programming	Manual Editing		Channel 4:0-255
				Channel 5:0-255
				Channel 6:0-255
				Channel 7:0-255
				Channel8:0-255
				Channel 9:0-255
				Channel 10:0-255
				Channel 11:0-255
				Channel 12:0-255
				Channel 13:0-255
				Channel 14:0-255
				Channel15:0-255
				Channel 16:0-255
				Channel 17:0-255
				Channel 18:0-255
				Channel 19:0-255
				Channel 20:0-255
				Channel 21:0-255
				Channel 22:0-255
				Channel 23:0-255
				Channel 24:0-255
				Channel 25:0-255
			Step 03	Time：0-255
				Channel 1:0-255
				Channel 2:0-255
				Channel 3:0-255
				Channel 4:0-255
				Channel 5:0-255
				Channel 6:0-255
				Channel 7:0-255
				Channel8:0-255
				Channel 9:0-255
				Channel 10:0-255
				Channel 11:0-255
				Channel 12:0-255
				Channel 13:0-255
				Channel 14:0-255
				Channel15:0-255
				Channel 16:0-255

6.Operation Setting	Self-Programming	Manual Editing		Channel 17:0-255
				Channel 18:0-255
				Channel 19:0-255
				Channel 20:0-255
				Channel 21:0-255
				Channel 22:0-255
				Channel 23:0-255
				Channel 24:0-255
				Channel 25:0-255
			Step 04	Time：0-255
				Channel 1:0-255
				Channel 2:0-255
				Channel 3:0-255
				Channel 4:0-255
				Channel 5:0-255
				Channel 6:0-255
				Channel 7:0-255
				Channel8:0-255
				Channel 9:0-255
				Channel 10:0-255
				Channel 11:0-255
				Channel 12:0-255
				Channel 13:0-255
				Channel 14:0-255
				Channel15:0-255
				Channel 16:0-255
				Channel 17:0-255
				Channel 18:0-255
				Channel 19:0-255
				Channel 20:0-255
				Channel 21:0-255
				Channel 22:0-255
				Channel 23:0-255
				Channel 24:0-255
				Channel 25:0-255
			Step 05	Time：0-255
				Channel 1:0-255
				Channel 2:0-255
				Channel 3:0-255

6.Operation Setting	Self-Programming	Manual Editing		Channel 4:0-255
				Channel 5:0-255
				Channel 6:0-255
				Channel 7:0-255
				Channel8:0-255
				Channel 9:0-255
				Channel 10:0-255
				Channel 11:0-255
				Channel 12:0-255
				Channel 13:0-255
				Channel 14:0-255
				Channel15:0-255
				Channel 16:0-255
				Channel 17:0-255
				Channel 18:0-255
				Channel 19:0-255
				Channel 20:0-255
				Channel 21:0-255
				Channel 22:0-255
				Channel 23:0-255
				Channel 24:0-255
				Channel 25:0-255
			Step 06	Time：0-255
				Channel 1:0-255
				Channel 2:0-255
				Channel 3:0-255
				Channel 4:0-255
				Channel 5:0-255
				Channel 6:0-255
				Channel 7:0-255
				Channel8:0-255
				Channel 9:0-255
				Channel 10:0-255
				Channel 11:0-255
				Channel 12:0-255
				Channel 13:0-255
				Channel 14:0-255
				Channel15:0-255
				Channel 16:0-255

6.Operation Setting	Self-Programming	Manual Editing		Channel 17:0-255
				Channel 18:0-255
				Channel 19:0-255
				Channel 20:0-255
				Channel 21:0-255
				Channel 22:0-255
				Channel 23:0-255
				Channel 24:0-255
				Channel 25:0-255
			Step 07	Time：0-255
				Channel 1:0-255
				Channel 2:0-255
				Channel 3:0-255
				Channel 4:0-255
				Channel 5:0-255
				Channel 6:0-255
				Channel 7:0-255
				Channel8:0-255
				Channel 9:0-255
				Channel 10:0-255
				Channel 11:0-255
				Channel 12:0-255
				Channel 13:0-255
				Channel 14:0-255
				Channel15:0-255
				Channel 16:0-255
				Channel 17:0-255
				Channel 18:0-255
				Channel 19:0-255
				Channel 20:0-255
				Channel 21:0-255
				Channel 22:0-255
				Channel 23:0-255
				Channel 24:0-255
				Channel 25:0-255
			Step 08	Time：0-255
				Channel 1:0-255
				Channel 2:0-255
				Channel 3:0-255

6.Operation Setting	Self-Programming	Manual Editing		Channel 4:0-255
				Channel 5:0-255
				Channel 6:0-255
				Channel 7:0-255
				Channel8:0-255
				Channel 9:0-255
				Channel 10:0-255
				Channel 11:0-255
				Channel 12:0-255
				Channel 13:0-255
				Channel 14:0-255
				Channel15:0-255
				Channel 16:0-255
				Channel 17:0-255
				Channel 18:0-255
				Channel 19:0-255
				Channel 20:0-255
				Channel 21:0-255
				Channel 22:0-255
				Channel 23:0-255
				Channel 24:0-255
				Channel 25:0-255
			Step 09	Time：0-255
				Channel 1:0-255
				Channel 2:0-255
				Channel 3:0-255
				Channel 4:0-255
				Channel 5:0-255
				Channel 6:0-255
				Channel 7:0-255
				Channel8:0-255
				Channel 9:0-255
				Channel 10:0-255
				Channel 11:0-255
				Channel 12:0-255
				Channel 13:0-255
				Channel 14:0-255
				Channel15:0-255
				Channel 16:0-255

6.Operation Setting	Self-Programming	Manual Editing		Channel 17:0-255
				Channel 18:0-255
				Channel 19:0-255
				Channel 20:0-255
				Channel 21:0-255
				Channel 22:0-255
				Channel 23:0-255
				Channel 24:0-255
				Channel 25:0-255
			Step 10	Time：0-255
				Channel 1:0-255
				Channel 2:0-255
				Channel 3:0-255
				Channel 4:0-255
				Channel 5:0-255
				Channel 6:0-255
				Channel 7:0-255
				Channel8:0-255
				Channel 9:0-255
				Channel 10:0-255
				Channel 11:0-255
				Channel 12:0-255
				Channel 13:0-255
				Channel 14:0-255
				Channel15:0-255
				Channel 16:0-255
				Channel 17:0-255
				Channel 18:0-255
				Channel 19:0-255
				Channel 20:0-255
				Channel 21:0-255
				Channel 22:0-255
				Channel 23:0-255
				Channel 24:0-255
				Channel 25:0-255
				Time：0-255
				Channel 1:0-255
				Channel 2:0-255
				Channel 3:0-255

6.Operation Setting	Self-Programming	Manual Editing	Step 11	Channel 4:0-255
				Channel 5:0-255
				Channel 6:0-255
				Channel 7:0-255
				Channel8:0-255
				Channel 9:0-255
				Channel 10:0-255
				Channel 11:0-255
				Channel 12:0-255
				Channel 13:0-255
				Channel 14:0-255
				Channel15:0-255
				Channel 16:0-255
				Channel 17:0-255
				Channel 18:0-255
				Channel 19:0-255
				Channel 20:0-255
				Channel 21:0-255
				Channel 22:0-255
				Channel 23:0-255
				Channel 24:0-255
				Channel 25:0-255
			Step 12	Time：0-255
				Channel 1:0-255
				Channel 2:0-255
				Channel 3:0-255
				Channel 4:0-255
				Channel 5:0-255
				Channel 6:0-255
				Channel 7:0-255
				Channel8:0-255
				Channel 9:0-255
				Channel 10:0-255
				Channel 11:0-255
				Channel 12:0-255
				Channel 13:0-255
				Channel 14:0-255
				Channel15:0-255
				Channel 16:0-255

				Channel 17:0-255
				Channel 18:0-255
				Channel 19:0-255
				Channel 20:0-255
				Channel 21:0-255
				Channel 22:0-255
				Channel 23:0-255
				Channel 24:0-255
				Channel 25:0-255
		Record DMX	Choose Step 0-12	Choose Step 0-12
			Time 0-255	Time 0-255
			Record	Record
		All Cleaning		
		No Signal	ON	Center/Auto/User/No Effect
			Operating	Save/Light-off
7.Advanced Setting	Fine	X	0-255	
		Y	0-255	
		Color	0-255	
		Focus	0-255	
		Rotating Gobo Wheel	0-255	
		Rotating Gobo	0-255	
		Zoom	0-255	
		Framing 1	0-255	
		Framing 2	0-255	
		Framing 3	0-255	
		Framing 4	0-255	
		Framing 5	0-255	
		Framing 6	0-255	
		Framing 7	0-255	
		Framing 8	0-255	
		Iris	0-255	
		Framing Rotating	0-255	
		Language	Chinese/English	
		Ignore Mistake	Code disk waveform	Yes/No
		Recovery Fine		
			Channel 1 : 000	
			Channel 2 : 000	
			Channel3 : 000	

8. Information	DMX Number		Channel4 : 000
			Channel5 : 000
			Channel6 : 000
			Channel7 : 000
			Channel8 : 000
			Channel9 : 000
			Channel10 : 000
			Channel11 : 000
			Channel12 : 000
			Channel13 : 000
			Channel14 : 000
			Channel15 : 000
			Channel16 : 000
			Channel17 : 000
			Channel18 : 000
			Channel19 : 000
			Channel20 : 000
			Channel21 : 000
			Channel22 : 000
			Channel23 : 000
			Channel24 : 000
			Channel25 : 000
			Channel26 : 000
			Channel27 : 000
			Channel28 : 000
			Channel29 : 000
			Channel30 : 000
	Mistake		
	Led chip	Using Time	
		Time Clear	

10. Dmx Protocol:

DMX Parameter number 39	DMX Value	Function
1		CMY-C
	0-255	Linear change from shallow to deep
2		CMY-M
	0-255	Linear change from shallow to deep
3		CMY-Y
	0-255	Linear change from shallow to deep
4		CTO
	0-255	CTO
5		COLOR FUNCTION
	0-85	Full Color
	86-170	Half Color
	171-255	Linear
6		COLOR WHEEL
		Full Color
	0-15	White
	16-31	Color 1
	32-47	Color 2
	48-63	Color 3
	64-79	Color 4
	80-95	Color 5
	96-111	Color 6
	112-127	Color 7
	128-190	Forward Flow
	191-192	Stop
	193-255	Reverse Flow
		Half Color
	0-7	Color 1 (White)
	8-15	Color 1+ Color 2
	16-23	Color 2
	24-31	Color 2+ Color 3

	32-39	Color 3
	40-47	Color 3+ Color 4
	48-55	Color 4
	56-63	Color 4+ Color 5
	64-71	Color 5
	72-79	Color 5+ Color 6
	80-87	Color 6
	88-95	Color 6+ Color 7
	96-103	Color 7
	104-111	Color 7+ Color 8
	112-119	Color 8
	120-127	Color 8+ Color 1
	128-190	Forward Flow
	191-192	Stop
	193-255	Reverse Flow
		Linear
	0-127	Color Linear
	128-190	Forward Flow
	191-192	Stop
	193-255	Reverse Flow
7		STROBE
	0-3	Closed
	3-103	Linear Strobe from slow to fast
	104-107	Open
	108-157	Fast on and slow off, from fast to slow
	158-207	Fast off and slow on, from fast to slow
	208-212	Open
	213-251	Random strobe, from slow to fast
	252-255	Open
8		DIMMER
	0-255	Continuously adjust light intensity: from 0% to 100%
9		DIMMER FINE (16 bit)
	0-255	Dimmer fine
10		IRIS
	0-255	IRIS from large to small

11		STATIC GOBO WHEEL
	0-8	Open
	9-17	Gobo 1
	18-26	Gobo 2
	27-35	Gobo 3
	36-44	Gobo 4
	45-53	Gobo 5
	54-62	Gobo 6
	63-71	Gobo 7
	72-113	The Gobo scrolls forward, from fast to slow
	114-117	Stop scroll
	118-159	The Gobo scrolls in reverse, from slow to fast
	160-173	Gobo 1 shakes from slow to fast
	174-187	Gobo 2 shakes from slow to fast
	188-200	Gobo 3 shakes from slow to fast
	201-214	Gobo 4 shakes from slow to fast
	215-227	Gobo 5 shakes from slow to fast
	228-241	Gobo 6 shakes from slow to fast
	242-255	Gobo 7 shakes from slow to fast
12		Rotating Gobo
	0-10	Open
	11-20	Gobo 1
	21-30	Gobo 2
	31-40	Gobo 3
	41-50	Gobo 4
	51-60	Gobo 5
	61-71	Gobo 6
	72-113	Positive gobo flow effect: from fast to slow
	114-117	Stop
	118-159	Reverse gobo flow effect: from slow to fast
	160-175	Gobo 1 swing, from slow to fast
	176-191	Gobo 2 swing, from slow to fast
	192-207	Gobo 3 swing, from slow to fast
	208-223	Gobo 4 swing, from slow to fast
	224-239	Gobo 5 swing, from slow to fast
	240-255	Gobo 6 swing, from slow to fast

13		Rotation gobo indexing and rotation
	0	No action
	1-127	Rotation gobo indexing
	128-191	Forward gobo rotation: from fast to slow
	192-255	Reverse gobo rotation: from slow to fast
14		Rotation gobo indexing fine adjustment
	0-255	Rotation gobo indexing fine adjustment
15		Prism 1
	0-127	No prism effect
	128-255	Prism 1 Insert
16		Prism 1 rotation and indexing
	0-127	Prism rotation
	128-191	Forward prism rotation: from fast to slow
	192-255	Reverse prism rotation: slow to fast
17		Empty
18		Empty
19		Frost
	0-63	Empty
	64-255	Linear cut-in
20		Empty
21		Focus
	0-255	Continuous adjustment from far to near
22		Zoom
	0-255	Zoom: beam angle from small to large

23		BLADE 1 - Linear Insertion
	0	Empty
	1-255	Blade 1Insert 0~100%
24		BLADE 1 swings
	0-127	-30°
	128	0°
	129-255	30°
25		BLADE 2 - Linear Insertion
	0	Empty
	1-255	Blade 2 Insert 0~100%
26		BLADE 2 swings
	0-127	-30°
	128	0°
	129-255	30°
27		BLADE 3 - Linear Insertion
	0	Empty
	1-255	Blade 3 Insert 0~100%
28		BLADE 3 swings
	0-127	-30°
	128	0°
	129-255	30°
29		BLADE 4 - Linear Insertion
	0	Empty
	1-255	Blade 4 Insert 0~100%
30		BLADE 4 swings
	0-127	-30°
	128	0°
	129-255	30°
31		FRAMING ROTATION
	0-255	FRAMING ROTATION
32		FRAMING MACRO

	0-7	Empty
	8-255	FRAMING MACRO
33		FRAMING MACRO function speed
	0-255	Switching speed from slow to fast
34		Pan
	0-255	Pan rotation
35		Pan Fine
	0-255	Pan fine
36		Tilt
	0-255	Tilt rotation
37		Tilt Fine
	0-255	Tilt fine
38		Reset
	0-99	Empty
	100-127	All reset
	128-255	Empty
39		Functional Channel
	0-40	Empty
	41-50	Dimming curve: Straight line
	51-60	Dimming curve: Square
	61-70	Dimming curve: Cubic
	71-75	Dimming curve: Hyperbola
	76-80	Dimming curve: logarithmic curve
	81-140	Empty
	141-150	Fan mode: Silent
	151-160	Fan mode: Theater mode
	161-255	Empty

11. Trouble Shooting

Listed below are a few common problems that you may encounter, with solutions.
Unit does not work, No light output and the fan does not work;
1.Check the power connection and main fuse.
2.Detects the mains supply voltage at the connector.

Not responding to DMX Control;
1.Check the DMX connectors/cables to see if they are linked prop- erly.
2.If the DMX LED is on and no response to the channel, check the address settings and the DMX controller polarity.
3.Try using another DMX controller.
4.Check to see if the DMX cables run near or run alongside to high voltage cable. It may cause damage or interference to DMX interface circuit.
5.Please change to another DMX console

One of the channels is not working well;
1.The stepper motor might be damaged or the cable connected to the PCB is broken.
2.The motor' s drive IC on the PCB might be out of condition.

12. Cleaning

Regularly clean the outside of the optical lens focusing on the dust. Based on the number of LEDs use a clean environment to determine: Are they moist, smoked or is the surrounding environment particular-ly dirty, which can cause dust deposition LEDs.

Please use a glass cleaning solution and a soft cloth to wipe the focusing optical lens. Carefully dry each part. At least 20 days to clean the dust outside a lens, the lens inside 30-60 days to clean up the dust once. Regular inspection LED fan and bottom case fan, a fan of at least 20\days to clean up dust deposition.

Cleaning must be executed in case of power failure.

13. Photometrics Diagram
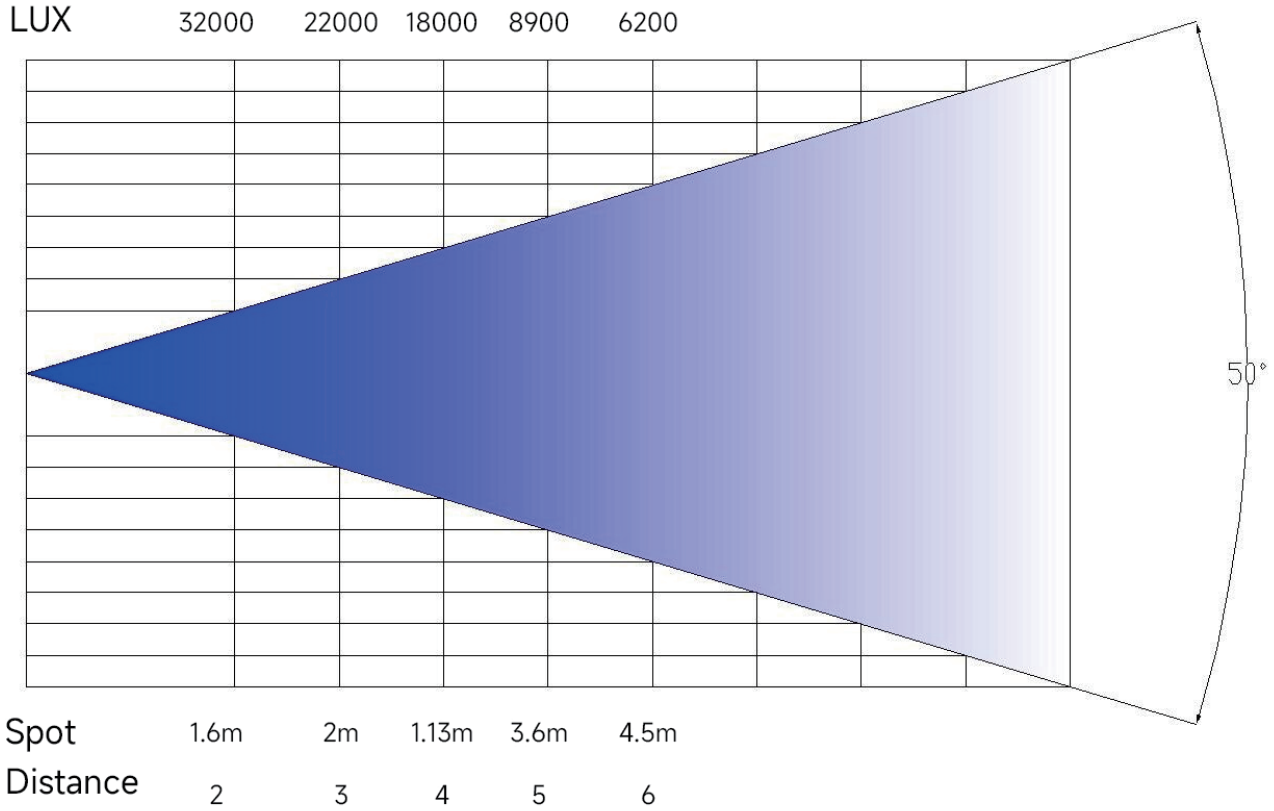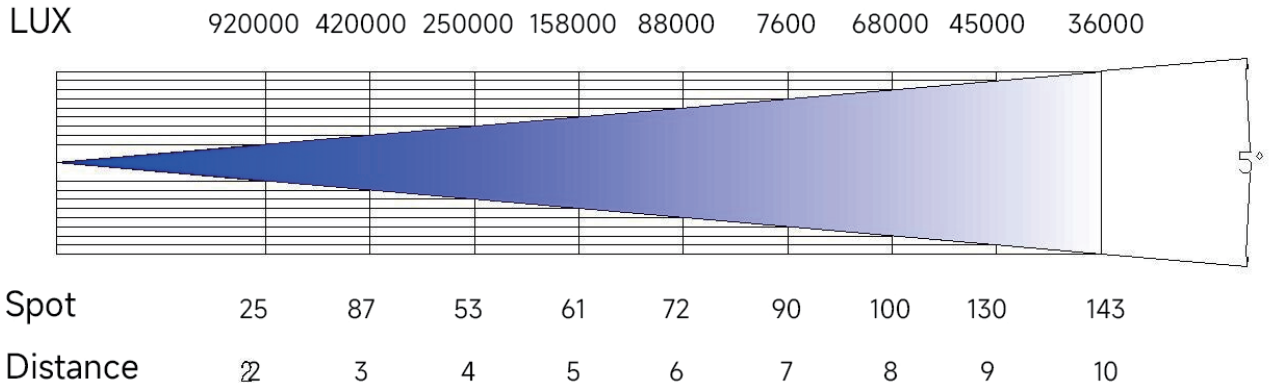
LED SPOT PROFILE 1200W