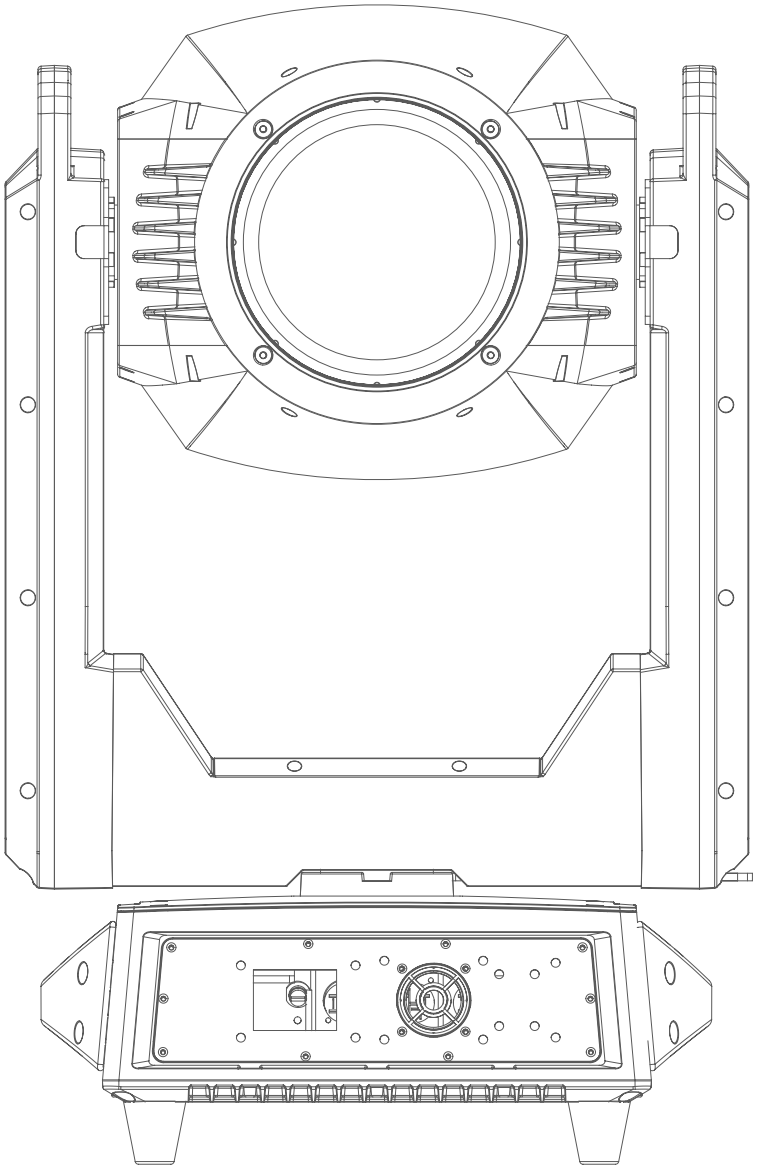

USER MANUAL

LED SPOT PROFILE IP 1200W

Foreword

Thank you for choosing the LED Spot Profile IP 1200W series of products. This moving head light is the latest high-quality beam light independently developed by our company. It is lighter and more convenient in the same power. It has the characteristics of perfect combination of international advanced electronic control technology and excellent humanized industrial design. The product fully complies with CE standards and supports international DMX512 signal control mode.

LED Spot Profile IP 1200W, using LED module light source, strong light effect, 6 replaceable and self-rotating glass gobos, clear gobo, 5 static gobos + 2 open, XY axis running fast and stable, precise positioning, 6 color pieces + high CRI, high standard color wheel, color is pure and uniform. Independent linear CMY system and independent CTO system can mix colors arbitrarily and switch quickly, standard 4-facet prism effect, prism pattern is clearly visible, creating more dreamy effects for the stage, standard moderate frost effect, frost spot can be linearly zoomed, edge overlap without overlapping shadows.

LED Spot Profile IP 1200W has super high and ultra-long range, framing system: 4 blades achieve fast and smooth framing, each blade cutting direction and angle can be independently controlled; the entire framing module can rotate ±90°

LED Spot Profile IP 1200W is widely used in outdoor large stadiums, large performances and other professional venues and all-weather environment.

Product Catalog

1: Safety Instructions ----------03

2: Technical Parameters----------04-05

3: Schematic Lighting Components----------05

4: Packing ----------06-07

5: Safety Standards ----------07-10

6: Ac Power ----------10-11

7: Light Source ----------11

8: Function Description----------11-12

9: Display Setting ----------13-23

10: Dmx Protocol ----------24-34

11: Trouble Shooting----------34

12: Cleaning----------34-35

13: Photometrics Diagram----------35

1. Safety Instructions

◇ Before using this product, please inspect carefully the product is not unwrapped or damaged during transportation. If there is any damage during transportation, please do not use the lights first, and contact with the dealer or manufacturer for further information.

◇ Before running products, ensure that the voltage and Hertz in accordance with the requirements of lights.

◇ It' s very important to connect ground wire to avoid the electric shock。

◇ This product is for dry indoor environment ONLY.

◇ This product must be installed on the sufficient space, adjacent to interface the shortest distance of 50 cm, to ensure that the lights will not crash each other.

◇ Before moving or repairing the product , please unplug the power.

◇ When it working, ensure that no inflammable and explosive near objects.

◇ When installing this product, please use the safety rope. When handling this product, lift the armrest base, rather than the lamp body.

◇ This product is suitable for a maximum temperature of 40 degrees Celsius, when the surrounding environment is higher than 40 degrees Celsius, please do not use this product.

◇ Do not touch the fixture when it is working.

◇ If there is any problem with the operation during the performance, the lamp should be stopped immediately. Please do not perform repairs without authorization, as repairs may easily cause damage or cause other malfunctions. Please contact the company's maintenance point for repair. During the repair process, please use accessories of the same model.

◇ Please read this instruction manual carefully, especially the installation, use and maintenance sections.

Importantly, the lamp must be transported in an anti-shock protective carton or flight case.

2. Technical Parameters

◇ Number of DMX channels: 39/65 channels
◇ Operation mode: DMX512 mode, RDM, etc.
◇ LCD LED display + button control
◇ 1000W white LED module, lifespan:20,000 hours
◇ Color temperature:7800K
◇ Color wheel: 6 color + high CRI film + open
◇ Static gobo wheel: 5 gobo + 2 open
◇ Glass gobo wheel: 6 replaceable rotating glass gobo +open,
◇ Glass gobo size: image diameter 23 mm, outside diameter: 27.9 mm, thickness: 1.1 mm
◇ CMY&CTO：Independent CMY linear color mixing and CTO linear color temperature system can meet the needs of stage effects in specific large and small theaters and related high-demand places
◇ Framing system: 4 blades, each with separate movement and full blackout, smooth with variable speed, fast for creating mid-air effects, the blades can be precisely positioned, ± 90° of the complete framing system, 180° rotation angle
◇ Iris: fast electric iris, linear spot zoom from 5% to 100%, with macro function and multi-effect changes
◇ Prism: high-definition 4-prism effect
◇ Optical lens: high-precision cemented optical lens
◇ 2 Frost: 0%~100% linear change light frost and heavy frost
◇ Focus: linear focus
◇ Dimming: 0-100% linear adjustment
◇ Beam angle: 5-50°
◇ Strobe: electronic strobe (0.5-20 times/second)
◇ Animation wheel: infinite rotation function
◇ XY axis motor, ultra-quiet, ultra-high speed 70 circular three-phase motor, running more smoothly
◇ Tilt Infinite Rotation(Optional)
◇ Number of motors: 27 ultra-quiet motors, two three-phase motors, 16-bit
◇ Housing: made of Magnesium aluminum alloy + carbon fiber
◇ Rated power: 1200W
◇ Protection level: IP65
◇ Net weight: About 39KG
◇ Dimension: 454*327*827mm
◇ Support RDM function, which can realize console dialing address code, etc.

LED SPOT PROFILE IP 1200W

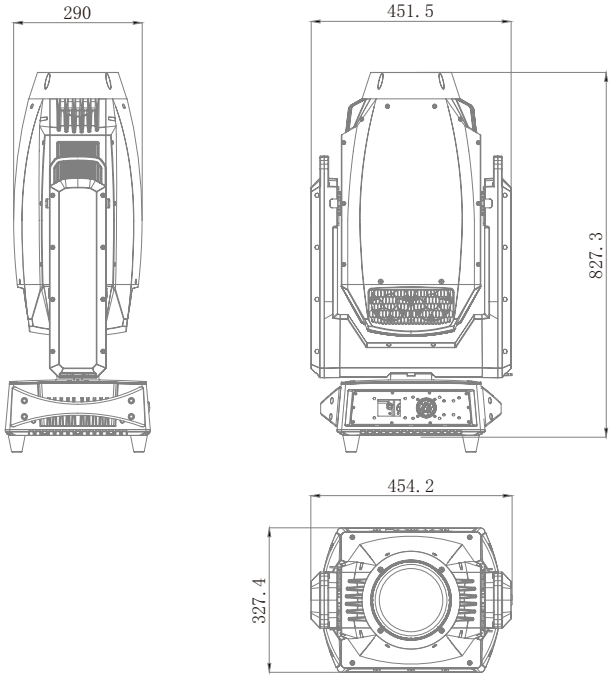

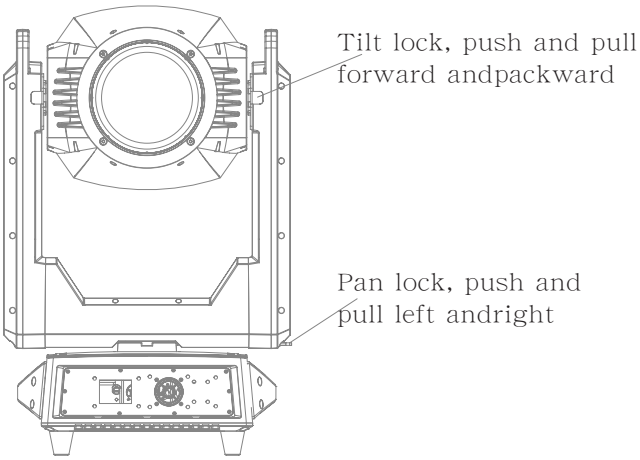

3. Lighting Components

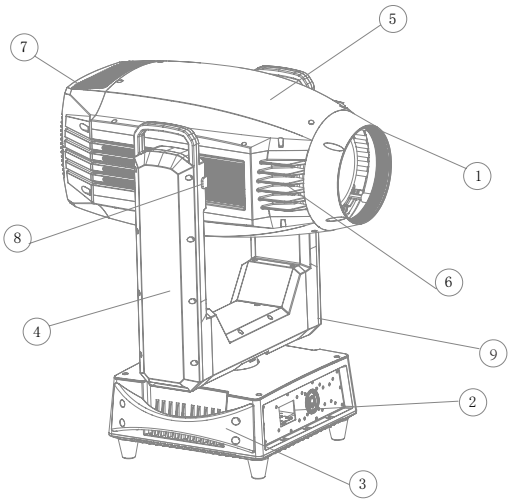

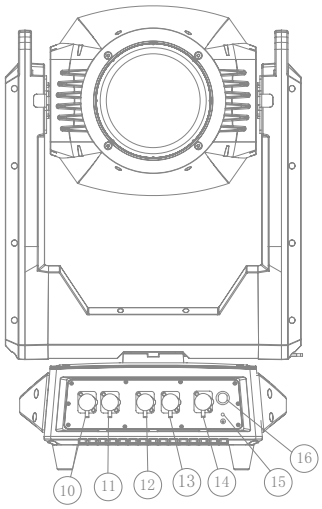

1: Lens Cover
2: Display screen
3: Handle
4: Arm cover
5: Body Cover
6: Main frame
7: Back cover
8: Y-axis push-pull lock
9: X-axis lock
10: Artnet input
11: Artnet output
12: 3-Pin signal input
13: 3-Pin signal output
14: Power input
15: Ground screw
16: Waterproof safety seat

4. Packing

4.1 Packing Material and Accessories

The fixture is packaged by carton or standard 1-in-1 flight case , accessories are as below:

Item	Quantity	Unit
User Manual	1	Piece
Signal Line	1	Piece
Safety Rope	1	Piece
Bracket+ Clamp	2	Piece
Power Cable	1	Piece

4.2 Protection Lock for Transport

For the convenience of transportation, the light has 2 protection locks (Each of it is on
the X-axis and Y-axis.). There are 4 locked buttons on the X-axis and 3 locked buttons on the Y-axis to lock the light' s position. The lock position is locked at the center and the light body is in a vertical position with the arm.

4.3 Packing

1. Power off to let the lamp cool completely before packaging at least 15 minutes or more
2. Lock the light protection locks when cleaning the surface of the light.
3. Use the packing bag to cover the light, grab the handle on both sides of the equipment and put it upside down and put it into the box gently.
4. Put the light' s accessories into packing box after putting the light into the box.
5. It' s only up to two crates stacked and is prohibited upside down.

4.4 Unpacking

1. Open the packing box and packing bag
2. Grab the equipment' s handles, lifting and carrying away the light from the packing box or opening the flight case cover placing lift boom close to the light base, then equipping light hook on light base bottom tightening quick Install locks. At last rising away boom to the top of the lamp from flight case, put the flight case away.
3. Unlock the light protection lock before turning on the light

Note: Upon receipt of light, please check if there is damage to the light caused by transport, please do not use the fixture if any damage, and contact us as soon as possible.

5. Safety Standards

Please kindly be notified that You should ensure that light and installation materials are checked regularly. Please do not install it by yourself if you do not have the professional work condition and
similar experience. Please ask the professionals to operate it. Incorrect installation will cause danger.

The working temperature for the equipment is available between minus 20 degree and 40 degrees Celsius. Do not use the equipment outside of this environment. Don' t stand under the light when the light is installed, dismantled, moved or serviced. The operator must ensure that the fixtures are securely connected. Installing the light after professionals approving electrical parameters make sure that these installation must be checked at least once per year by experts.

5.1 Hook Installation

The equipment can be placed on the stage or on a stand in any direction, quick lock system can quickly and easily remove or install a light hook

Note:The lamp has been installed with a folding lamp hook. When in use, the folding lamp hook is erected and a rotatable folding lamp hook can be rotated so that the hanging sides of the lamp hook are in the same direction.

5.2 Fixing Equipment

1. Please confirm the rigging equipment is not damaged and can bear at least 10 times of light' s weight before installing. Also check the building can be bore at least 10 times of total weights of light, fixture, and cable accessories.

2.If truss can be lifted the equipment can be directly clamped from flight case and locked fixture base. Then hung on the light and fixed it. Before rising the light to right height, connect the power line and signal line.

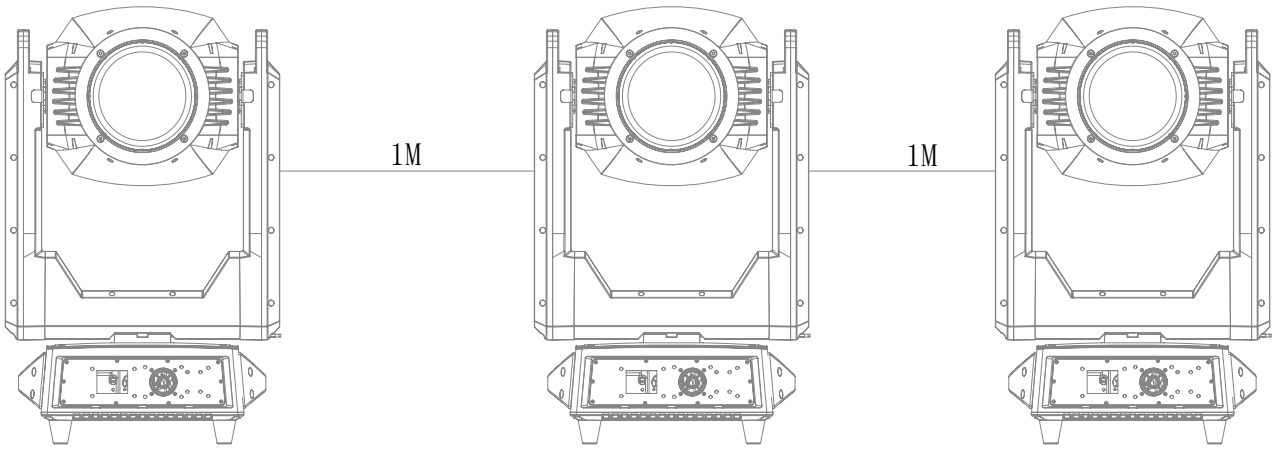

Note: Lights be placed vertically upward, the shortest distance between working lights must be more than or equal 900mm, lighting installation layout as above photo.

5.3 Data Cable Connect

Data cable is DMX512 signal.
Note: Signal line connections is X-type connector.
X-type connector --- If the external flexible cable or cord of this light is damaged, please replace the professional cable or cord from the manufacture or its agent.
DMX of lights input and output connects to a 3&5-pin XLR,
1. first pin is grounded.
2. second negative signal is second pin.
3. third pin connects to the positive polarity signal.
4. empty.
5. empty.
In order to prevent reception reflection and interference control signal, a terminal plug must be installed on the first branch of the connected device last 3-pin output jack.

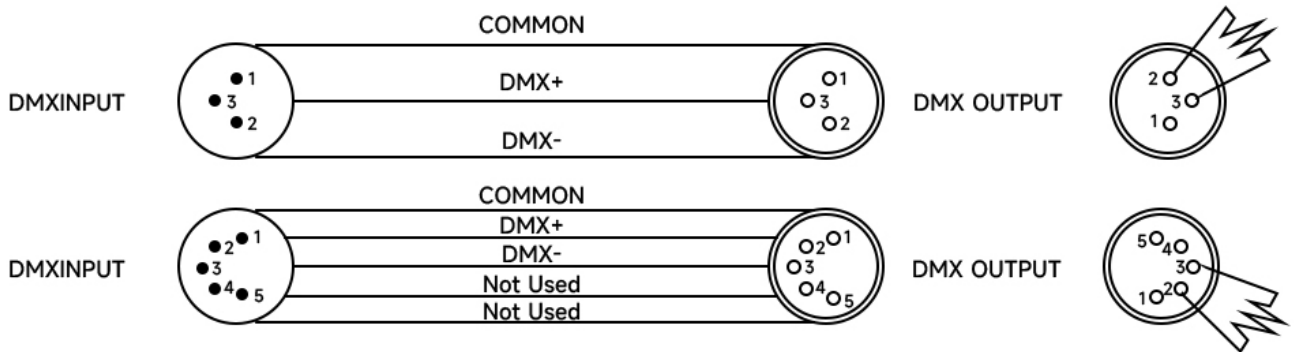

The controller connects to the nearest input XLR 3-pin/5-Pin, then from the output of the device connects to the input of the next device, continuous connection one by one, the final output data cable terminal equipment plug one end into the terminal.

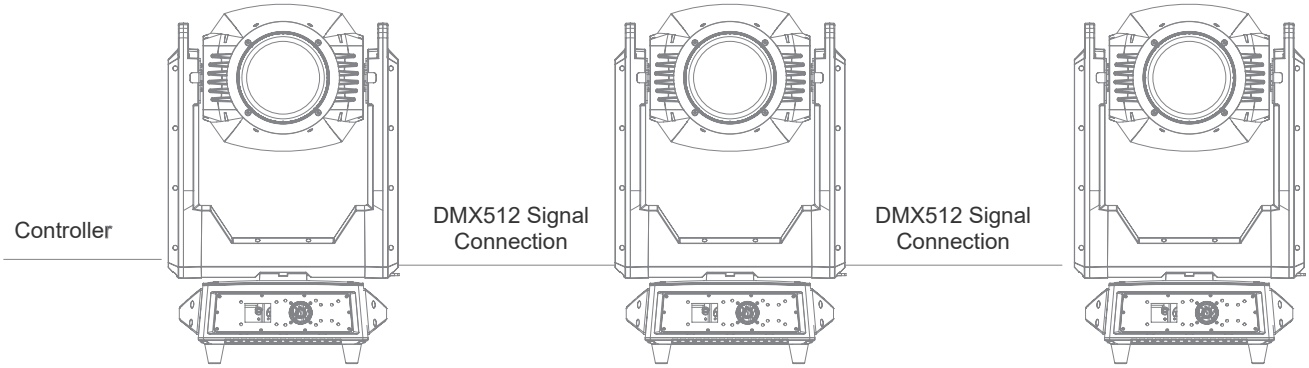

When transmitting signals over long distances, a 512 signal amplifier is required. Firstly, please connect the controller to the DMX512 signal amplifier input terminal, then connect its output terminal to the lamps, and finally equip it with a terminal plug.

Note: Please use two output separation connections, if you want to separate the continuous connection branches, you must use a DMX512 signal amplifier to separate them..

Please use a shielded twisted pair cable that is specifically configured for DMX512. Standard amplifier cables cannot reliably control data over long distances..

6. AC Power

6.1 Fuse

The power supply and fuse configurations are as follows:

Power Supply
100-240v~ 20A

Fuse
6*30 Main Fuse

6.2 Power Connection

If the external flexible cable or cord of this light is damaged, the line is up to the manufacturer or its service agent or a similar qualified person to replace, in order to avoid danger.
Connect the power supply personnel must have the appropriate qualifications before proceeding, you must make sure you are using the power supply voltage matches the voltage identified and have overload or leakage protection. Directly connect the device to the power supply, do not connect to the silicon box dimming system, otherwise damage to the equipment.

7. Light Source

7.1 Light source specification

LED Spot Profile IP 1200W uses LED module, which provides a very stable color temperature at 7800K, color rendering index greater than 70, and an average life of more than 20,000 hours (depending on the use environment of the lamp)

Note:
1. Please do not install other similar modules, otherwise it will cause safety hazards or damage the equipment.
2. To reduce the risk of damaging the lamp, replace the bulb before the service life of the bulb is exceeded.
3. Do not use scratched and damaged LED light sources

8. Function Description

8.1 Optical lens focusing

Two high-precision screw motors work synchronously to adjust the optical lens to achieve the clarity of the light spot.

Color wheel

CMY+CTO

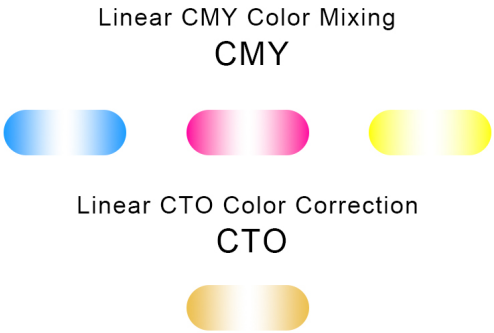

Animation Wheel

Rotating Gobo Wheel

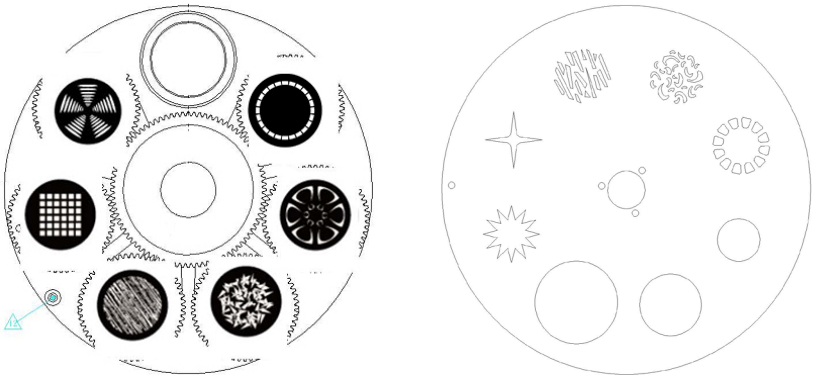

8.2 Dimming and strobe

0-100% electronic dimming, instant on and off, strobe speed can be adjusted at will, up to 20 times/second, and comes with a special function of random strobe.

8.3 Horizontal and vertical scanning

Horizontal scanning 540 degrees, vertical scanning 270 degrees, both equipped with XY axis magnetic encoders, with 16BIT precise positioning function.
Horizontal and vertical speeds are adjustable.

9. Display Setting

9.1 Display panel introduction

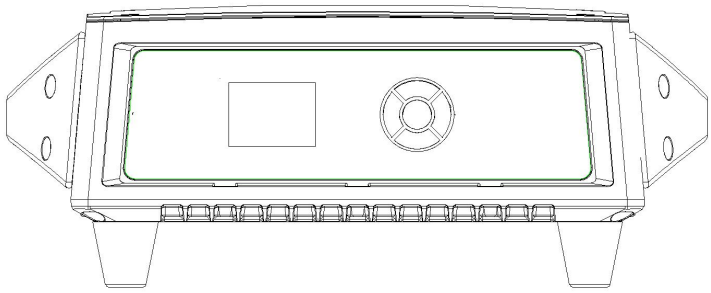

9.2/Menu Operation:

Button		
ESC Enter up down		
1.DMXAddress：00-512		
2.Channel：65		
3.Reset	Motor power supply	ON/OFF
	XY	ON/OFF
	Color	ON/OFF
	Gobo	ON/OFF
	Light Road	ON/OFF
4.Operation	DMX//AUTO/USER	
5.Manual Control	X	0-255
	Y	0-255
	XY Speed	0-255
	Strobe	0-255
	Dimmer	0-255
	Color	0-255
	Rotating Gobo Wheel	0-255
	Rotating Gobo	0-255
	Framing 01	0-255
	Framing 02	0-255
	Framing 03	0-255
	Framing 04	0-255
	Framing 05	0-255

	Framing06		0-255	
	Framing07		0-255	
	Framing08		0-255	
	Framing Disc Rotating		0-255	
	Iris		0-255	
	Focus		0-255	
	Zoom		0-255	
6.Operation Setting	Master& Slave Mode		Master/Slave	
	XY Setting	1. Manual Scanning Yes/No	1. Manual Scanning Yes/No	
		2. X Reverse Yes/No	2. X Direction Yes/No	
		3. Y Reverse Yes/No	3. Y Reverse Yes/No	
		4. Speed channel real-time Yes/No	4. Speed channel real-time Yes/No	
	Dimming curve	Linear/Square/Square Root/S Curve/Logarithmic		
	Self-Programming	Manual Editing	Step01	Time：0-255
				Channel 1:0-255
				Channel 2:0-255
				Channel 3:0-255
				Channel 4:0-255
				Channel 5:0-255
				Channel 6:0-255
				Channel 7:0-255
				Channel 8:0-255
				Channel 9:0-255
				Channel 10:0-255
				Channel 11:0-255
				Channel 12:0-255
				Channel 13:0-255
				Channel 14:0-255
				Channel 15:0-255
				Channel 16:0-255
				Channel 17:0-255
				Channel 18:0-255
				Channel 19:0-255
				Channel 20:0-255
				Channel 21:0-255
				Channel 22:0-255

				Channel 23:0-255
				Channel 24:0-255
				Channel 25:0-255
			Step 02	Time：0-255
				Channel 1:0-255
				Channel 2:0-255
				Channel 3:0-255
				Channel 4:0-255
				Channel 5:0-255
				Channel 6:0-255
				Channel 7:0-255
				Channel 8:0-255
				Channel 9:0-255
				Channel 10:0-255
				Channel 11:0-255
				Channel 12:0-255
				Channel 13:0-255
				Channel 14:0-255
				Channel 15:0-255
				Channel 16:0-255
				Channel 17:0-255
				Channel 18:0-255
				Channel 19:0-255
				Channel 20:0-255
				Channel 21:0-255
				Channel 22:0-255
				Channel 23:0-255
				Channel 24:0-255
				Channel 25:0-255
			Step 03	Time：0-255
				Channel 1:0-255
				Channel 2:0-255
				Channel 3:0-255
				Channel 4:0-255
				Channel 5:0-255
				Channel 6:0-255
				Channel 7:0-255
				Channel 8:0-255
				Channel 9:0-255

				Channel 10:0-255
				Channel 11:0-255
				Channel 12:0-255
				Channel 13:0-255
				Channel 14:0-255
				Channel 15:0-255
				Channel 16:0-255
				Channel 17:0-255
				Channel 18:0-255
				Channel 19:0-255
				Channel 20:0-255
				Channel 21:0-255
				Channel 22:0-255
				Channel 23:0-255
				Channel 24:0-255
				Channel 25:0-255
			Step 04	Time：0-255
				Channel 1:0-255
				Channel 2:0-255
				Channel 3:0-255
				Channel 4:0-255
				Channel 5:0-255
				Channel 6:0-255
				Channel 7:0-255
				Channel 8:0-255
				Channel 9:0-255
				Channel 10:0-255
				Channel 11:0-255
				Channel 12:0-255
				Channel 13:0-255
				Channel 14:0-255
				Channel 15:0-255
				Channel 16:0-255
				Channel 17:0-255
				Channel 18:0-255
				Channel 19:0-255
				Channel 20:0-255
				Channel 21:0-255
				Channel 22:0-255

			Step 05	Time：0-255
				Channel 1:0-255
				Channel 2:0-255
				Channel 3:0-255
				Channel 4:0-255
				Channel 5:0-255
				Channel 6:0-255
				Channel 7:0-255
				Channel 8:0-255
				Channel 9:0-255
				Channel 10:0-255
				Channel 11:0-255
				Channel 12:0-255
				Channel 13:0-255
				Channel 14:0-255
				Channel 15:0-255
				Channel 16:0-255
				Channel 17:0-255
				Channel 18:0-255
				Channel 19:0-255
				Channel 20:0-255
				Channel 21:0-255
				Channel 22:0-255
				Channel 23:0-255
				Channel 24:0-255
				Channel 25:0-255
			Step 06	Time：0-255
				Channel 1:0-255
				Channel 2:0-255
				Channel 3:0-255
				Channel 4:0-255
				Channel 5:0-255
				Channel 6:0-255
				Channel 7:0-255
				Channel 8:0-255
				Channel 9:0-255
				Channel 10:0-255
				Channel 11:0-255
				Channel 12:0-255

				Channel 13:0-255
				Channel 14:0-255
				Channel 15:0-255
				Channel 16:0-255
				Channel 17:0-255
				Channel 18:0-255
				Channel 19:0-255
				Channel 20:0-255
				Channel 21:0-255
				Channel 22:0-255
				Channel 23:0-255
				Channel 24:0-255
				Channel 25:0-255
			Step 07	Time：0-255
				Channel 1:0-255
				Channel 2:0-255
				Channel 3:0-255
				Channel 4:0-255
				Channel 5:0-255
				Channel 6:0-255
				Channel 7:0-255
				Channel 8:0-255
				Channel 9:0-255
				Channel 10:0-255
				Channel 11:0-255
				Channel 12:0-255
				Channel 13:0-255
				Channel 14:0-255
				Channel 15:0-255
				Channel 16:0-255
				Channel 17:0-255
				Channel 18:0-255
				Channel 19:0-255
				Channel 20:0-255
				Channel 21:0-255
				Channel 22:0-255
				Channel 23:0-255
				Channel 24:0-255
				Channel 25:0-255

			Step 08	Time：0-255
				Channel 1:0-255
				Channel 2:0-255
				Channel 3:0-255
				Channel 4:0-255
				Channel 5:0-255
				Channel 6:0-255
				Channel 7:0-255
				Channel 8:0-255
				Channel 9:0-255
				Channel 10:0-255
				Channel 11:0-255
				Channel 12:0-255
				Channel 13:0-255
				Channel 14:0-255
				Channel 15:0-255
				Channel 16:0-255
				Channel 17:0-255
				Channel 18:0-255
				Channel 19:0-255
				Channel 20:0-255
				Channel 21:0-255
				Channel 22:0-255
				Channel 23:0-255
				Channel 24:0-255
				Channel 25:0-255
			Step 09	Time：0-255
				Channel 1:0-255
				Channel 2:0-255
				Channel 3:0-255
				Channel 4:0-255
				Channel 5:0-255
				Channel 6:0-255
				Channel 7:0-255
				Channel 8:0-255
				Channel 9:0-255
				Channel 10:0-255
				Channel 11:0-255
				Channel 12:0-255

				Channel 13:0-255
				Channel 14:0-255
				Channel 15:0-255
				Channel 16:0-255
				Channel 17:0-255
				Channel 18:0-255
				Channel 19:0-255
				Channel 20:0-255
				Channel 21:0-255
				Channel 22:0-255
				Channel 23:0-255
				Channel 24:0-255
				Channel 25:0-255
			Step 10	Time：0-255
				Channel 1:0-255
				Channel 2:0-255
				Channel 3:0-255
				Channel 4:0-255
				Channel 5:0-255
				Channel 6:0-255
				Channel 7:0-255
				Channel 8:0-255
				Channel 9:0-255
				Channel 10:0-255
				Channel 11:0-255
				Channel 12:0-255
				Channel 13:0-255
				Channel 14:0-255
				Channel 15:0-255
				Channel 16:0-255
				Channel 17:0-255
				Channel 18:0-255
				Channel 19:0-255
				Channel 20:0-255
				Channel 21:0-255
				Channel 22:0-255
				Channel 23:0-255
				Channel 24:0-255
				Channel 25:0-255

			Step 11	Time：0-255
				Channel 1:0-255
				Channel 2:0-255
				Channel 3:0-255
				Channel 4:0-255
				Channel 5:0-255
				Channel 6:0-255
				Channel 7:0-255
				Channel 8:0-255
				Channel 9:0-255
				Channel 10:0-255
				Channel 11:0-255
				Channel 12:0-255
				Channel 13:0-255
				Channel 14:0-255
				Channel 15:0-255
				Channel 16:0-255
				Channel 17:0-255
				Channel 18:0-255
				Channel 19:0-255
				Channel 20:0-255
				Channel 21:0-255
				Channel 22:0-255
				Channel 23:0-255
				Channel 24:0-255
				Channel 25:0-255
			Step 12	Time：0-255
				Channel 1:0-255
				Channel 2:0-255
				Channel 3:0-255
				Channel 4:0-255
				Channel 5:0-255
				Channel 6:0-255
				Channel 7:0-255
				Channel 8:0-255
				Channel 9:0-255
				Channel 10:0-255
				Channel 11:0-255
				Channel 12:0-255

				Channel 13:0-255
				Channel 14:0-255
				Channel 15:0-255
				Channel 16:0-255
				Channel 17:0-255
				Channel 18:0-255
				Channel 19:0-255
				Channel 20:0-255
				Channel 21:0-255
				Channel 22:0-255
				Channel 23:0-255
				Channel 24:0-255
				Channel 25:0-255
		Record DMX	Choose Step 0-12	Choose Step 0-12
			Time 0-255	Time 0-255
			Record	Record
		All Cleaning		
		No Signal	ON	Center/Auto/User/No Effect
			Operating	Save/Light-off
7.Advanced Setting	Fine	X	0-255	
		Y	0-255	
		Color	0-255	
		Focus	0-255	
		Rotating Gobo Wheel	0-255	
		Rotating Gobo	0-255	
		Zoom	0-255	
		Framing 1	0-255	
		Framing 2	0-255	
		Framing 3	0-255	
		Framing 4	0-255	
		Framing 5	0-255	
		Framing 6	0-255	
		Framing 7	0-255	
		Framing 8	0-255	
		Iris	0-255	
		Framing Rotating	0-255	
		Language	Chinese/English	
		Ignore Mistake	Code disk waveform	Yes/No
		Recovery Fine		

8.Information	DMX Number	Channel 1 : 000
		Channel 2 : 000
		Channel3 : 000
		Channel4 : 000
		Channel5 : 000
		Channel6 : 000
		Channel7 : 000
		Channel8 : 000
		Channel9 : 000
		Channel10 : 000
		Channel11 : 000
		Channel12 : 000
		Channel13 : 000
		Channel14 : 000
		Channel15 : 000
		Channel16 : 000
		Channel17 : 000
		Channel18 : 000
		Channel19 : 000
		Channel20 : 000
		Channel21 : 000
		Channel22 : 000
		Channel23 : 000
		Channel24 : 000
		Channel25 : 000
		Channel26 : 000
		Channel27 : 000
		Channel28 : 000
		Channel29 : 000
		Channel30 : 000
	Mistake	
	Led chip	Using Time
		Time Clear

10. Dmx Protocol:39

DMX Parameter number 39	DMX Value	Description
1		CMY-C
	0-255	Linear change from shallow to deep
2		CMY-M
	0-255	Linear change from shallow to deep
3		CMY-Y
	0-255	Linear change from shallow to deep
4		CTO
	0-255	CTO
5		Empty
6		Color
	0-7	Color 1 （Open）
	8-15	Color 1+ Color 2
	16-23	Color 2
	24-31	Color 2+ Color 3
	32-39	Color 3
	40-47	Color 3+ Color 4
	48-55	Color 4
	56-63	Color 4+ Color 5
	64-71	Color 5
	72-79	Color 5+ Color 6
	80-87	Color 6
	88-95	Color 6+ Color 7
	96-103	Color 7
	104-111	Color 7+ Color 8
	112-119	Color 8
	120-127	Color 8+ Color 1
	128-190	Forward Flow
	191-192	Stop
	193-255	Reverse Flow
7		STROBE
	0-3	Closed
	3-103	Standard Strobe from slow to fast
	104-107	Open
	108-157	Fast on and slow off, from fast to slow
	158-207	Fast off and slow on, from fast to slow

	208-212	Open
	213-251	Random strobe, from slow to fast
	252-255	Open
8		DIMMER
	0-255	Continuously adjust light intensity: from 0% to 100%
9		DIMMER FINE
	0-255	Dimmer fine
10		IRIS
	0-127	IRIS from large to small
	128-131	Open
	132-171	Macro effects1
	172-211	Macro effects2
	212-251	Macro effects3
	252-255	Open
11		STATIC GOBO WHEEL
	0-8	Open
	9-17	Gobo 1
	18-26	Gobo 2
	27-35	Gobo 3
	36-44	Gobo 4
	45-53	Gobo 5
	54-62	Gobo 6
	63-71	Gobo 7
	72-113	The Gobo scrolls forward, from fast to slow
	114-117	Stop scroll
	118-159	The Gobo scrolls in reverse, from slow to fast
	160-173	Gobo 1 shakes from slow to fast
	174-187	Gobo 2 shakes from slow to fast
	188-200	Gobo 3 shakes from slow to fast
	201-214	Gobo 4 shakes from slow to fast
	215-227	Gobo 5 shakes from slow to fast
	228-241	Gobo 6 shakes from slow to fast
	242-255	Gobo 7 shakes from slow to fast
12		Rotating Gobo
	0-10	Open
	11-20	Gobo 1
	21-30	Gobo 2
	31-40	Gobo 3
	41-50	Gobo 4
	51-60	Gobo 5
	61-71	Gobo 6

	72-113	Positive gobo flow effect: from fast to slow
	114-117	Stop
	118-159	Reverse gobo flow effect: from slow to fast
	160-175	Gobo 1 swing, from slow to fast
	176-191	Gobo 2 swing, from slow to fast
	192-207	Gobo 3 swing, from slow to fast
	208-223	Gobo 4 swing, from slow to fast
	224-239	Gobo 5 swing, from slow to fast
	240-255	Gobo 6 swing, from slow to fast
13		Rotation gobo indexing and rotation
	0	No action
	1-127	Rotation gobo indexing
	128-191	Forward gobo rotation: from fast to slow
	192-255	Reverse gobo rotation: from slow to fast
14		Rotation gobo indexing fine adjustment
	0-255	Rotation gobo indexing fine adjustment
15		Prism 1
	0-127	No prism effect
	128-255	Prism 1 Insert
16		Prism 1 rotation and indexing
	0-127	Prism Rotation
	128-191	Forward prism rotation: from fast to slow
	192-255	Reverse prism rotation: slow to fast
17		Empty
18		ANIMATION WHEEL
	0-7	Empty
	8-127	ANIMATION WHEEL Insert，Forward flow，Speed from fast to slow
	128-135	Stop
	136-255	ANIMATION WHEEL Inser, Reverse flow，Speed from slow to fast
19		Frost
	0-63	Empty
	64-255	Linear Insert
20		Frost2
	0-63	Empty
	64-255	Linear Insert
21		Focus
	0-255	Continuous adjustment from far to near
22		Zoom
	0-255	Zoom: beam angle from small to large

23		BLADE 1
	0	Empty
	1-255	Blade1 Insert 0~100%
24		BLADE 2
	0	Empty
	1-255	Blade2 Insert 0~100%
25		BLADE 3
	0	Empty
	1-255	Blade3 Insert 0~100%
26		BLADE 4
	0	Empty
	1-255	Blade4 Insert 0~100%
27		BLADE 5
	0	Empty
	1-255	Blade5 Insert 0~100%
28		BLADE 6
	0	Empty
	1-255	Blade6 Insert 0~100%
29		BLADE 7
	0	Empty
	1-255	Blade7 Insert 0~100%
30		BLADE 8
	0	Empty
	1-255	Blade 8 Insert 0~100%
31		FRAMING ROTATION
	0-255	FRAMING ROTATION
32		Empty
33		Empty
34		Pan
	0-255	Pan Rotation
35		Pan Fine
	0-255	Pan Fine
36		Tilt
	0-255	Tilt Rotation
37		Tilt Fine
	0-255	Tilt fine
38		Tilt Infinite Rotation
	0-127	Empty
	128-189	Forward flow, speed from fast to slow
	190-193	Stop
	194-255	Reverse flow，speed from slow to fast

39		Reset
	0-24	Empty
	25-26	Fan mode: Automatic
	27-28	Empty
	29-30	Fan mode: Silent
	31-44	Empty
	45-49	Dimming curve: square
	50-54	Dimming curve: Straight line
	55-58	Dimming frequency: 1kHz
	59-62	Dimming frequency: 2K
	63-66	Dimming frequency: 16K
	67-69	Dimming frequency: 25K
	70-79	Empty
	80-84	All Reset
	88-90	Color Reset
	91-93	Gobo Reset
	94-96	Empty
	97-99	Other Reset
	100-255	Empty

10. Dmx Protocol:65

DMX Parameter number 65	DMX Value	Description
1		Pan
	0-255	Pan Rotate
2		Pan Fine
	0-255	Pan Fine
3		Tilt
	0-255	Tilt Rotate
4		Tilt Fine
	0-255	Tilt Fine
5		Pan/Tilt Speed
	0	MAX Speed
		Under speed mode
	1-255	Speed from fast to slow
		Under time mode
	1-255	Time from 0.1s to 25.5s
6		empty
7		Tilt Smooth Flow

	0-127	empty
	128-189	Forward flow, speed from fast to slow
	190-193	Stop
	194-255	Reverse flow, speed from slow to fast
8		Shutter/Strobe
	0-3	Close/Off
	3-103	Standard strobe, from slow to fast
	104-107	Open/On
	108-157	Fast open & slow close, from fast to slow
	158-207	Fast close & slow open, from fast to slow
	208-212	Open/On
	213-251	Random strobe, from slow to fast
	252-255	Open/On
9		Dimmer
	0-255	Continuous dimming: 0% ~ 100%
10		Dimmer Fine
	0-255	Dimmer Fine
11		Dimmer
	0-255	Continuous adjustment from far to near
12		Zoom (Focus) Fine
	0-255	Fine adjustment: from far to near
13		Zoom
	0-255	Zoom: beam angle from small to large
14		Zoom Fine
	0-255	Fine adjustment: beam angle from small to large
15		empty
16		empty
17		Color
	0-7	Color 1 (White)
	8-15	Color 1 + Color 2
	16-23	Color 2
	24-31	Color 2 + Color 3
	32-39	Color 3
	40-47	Color 3 + Color 4
	48-55	Color 4
	56-63	Color 4 + Color 5
	64-71	Color 5
	72-79	Color 5 + Color 6
	80-87	Color 6
	88-95	Color 6 + Color 7
	96-103	Color 7

	104-111	Color 7 + Color 8
	112-119	Color 8
	120-127	Color 8 + Color 1
	128-190	Forward Color Flow
	191-192	Stop
	193-255	Reverse Color Flow
18		Color Fine
	0-255	Color Fine
19		CMY-C
	0-255	Linear change from light to deep
20		CMY-C Fine
	0-255	CMY-C Fine
21		CMY-M
	0-255	0-255 Linear change from light to deep
22		CMY-M Fine
	0-255	CMY-M Fine
23		CMY-Y
	0-255	Linear change from light to deep
24		CMY-Y Fine
	0-255	CMY-Y Fine
25		CTO
	0-255	CTO
26		CTO Fine
	0-255	CTO Fine
27		Empty
28		Empty
29		Empty
30		Empty
31		Empty
32		Rotating Gobo
	0-10	Open / Aperture
	11-20	Gobo 1
	21-30	Gobo 2
	31-40	Gobo 3
	41-50	Gobo 4
	51-60	Gobo 5
	61-71	Gobo 6
	72-113	Forward gobo flow effect: from fast to slow
	114-117	Stop
	118-159	Reverse gobo flow effect: from slow to fast
	160-175	Gobo 1 swing, from slow to fast

	176-191	Gobo 2 swing, from slow to fast
	192-207	Gobo 3 swing, from slow to fast
	208-223	Gobo 4 swing, from slow to fast
	224-239	Gobo 5 swing, from slow to fast
	240-255	Gobo 6 swing, from slow to fast
33		Rotating Gobo Indexing and Rotation
	0	No action
	1-127	Rotating Gobo Indexing
	128-191	Forward gobo rotation: from fast to slow
	192-255	Reverse gobo rotation: from slow to fast
34		Rotating Gobo Indexing Fine
	0-255	Rotating Gobo Indexing Fine
35		Fixed Gobo
	0-8	Open
	9-17	Gobo 1
	18-26	Gobo 2
	27-35	Gobo 3
	36-44	Gobo 4
	45-53	Gobo 5
	54-62	Gobo 6
	63-71	Gobo 7
	72-113	Gobo forward scroll, from fast to slow
	114-117	Stop scrolling
	118-159	Gobo reverse scroll, from slow to fast
	160-173	Gobo 1 shake, from slow to fast
	174-187	Gobo 2 shake, from slow to fast
	188-200	Gobo 3 shake, from slow to fast
	201-214	Gobo 4shake, from slow to fast
	215-227	Gobo 5 shake, from slow to fast
	228-241	Gobo 6 shake, from slow to fast
	242-255	Gobo 7 shake, from slow to fast
36		Effect wheel
	0-7	empty
	8-127	Effect wheel engage, forward flow, speed from fast to slow
	128-135	Stop
	136-255	Effect wheel engage, reverse flow, speed from slow to fast
37		Iris
	0-127	Iris from large to small
	128-131	Open

	132-171	Macro Effect 1
	172-211	Macro Effect 2
	212-251	Macro Effect 3
	252-255	Open
38		Iris Fine
	0-255	Iris Fine
39		Prism 1
	0-127	No Prism Effect
	128-255	Prism 1 Insert
40		Prism 1 Rotation and Indexing
	0-127	Prism Indexing
	128-191	Forward prism rotation: from fast to slow
	192-255	Reverse prism rotation: from slow to fast
41		empty
42		empty
43		empty
44		empty
45		Frost / Diffusion
	0-63	empty
	64-255	Linear engage
46		Frost 2 / Diffusion 2
	0-63	empty
	64-255	Linear engage
47		Cutter 1 / Shutter 1
	0	empty
	1-255	Cutter 1 Insert 0~100%
48		Cutter 1 Fine
	0-255	Cutter 1 Fine
49		Cutter 2 / Shutter 2
	0	empty
	1-255	Cutter 2 Insert 0~100%
50		Cutter 2 Fine
	0-255	Cutter 2 Fine
51		Cutter 3 / Shutter 3
	0	empty
	1-255	Cutter 3 Insert 0~100%
52		Cutter 3 Fine
	0-255	Cutter 3 Fine
53		Cutter 4 / Shutter 4
	0	Empty
	1-255	Cutter 4 Insert 0~100%

54		Cutter 4 Fine
	0-255	Cutter 4 Fine
55		Cutter 5 / Shutter 5
	0	empty
	1-255	Cutter 5 Insert 0~100%
56		Cutter 5 Fine
	0-255	Cutter 5 Fine
57		Cutter 6 / Shutter 6
	0	empty
	1-255	Cutter 6 Insert 0~100%
58		Cutter 6 Fine
	0-255	Cutter 6 Fine
59		Cutter 7 / Shutter 7
	0	empty
	1-255	Cutter 7 Insert 0~100%
60		Cutter 7 Fine
	0-255	Cutter 7 Fine
61		Cutter 8 / Shutter 8
	0	empty
	1-255	Cutter 8 Insert 0~100%
62		Cutter 8 Fine
	0-255	0-255 Cutter 8 Fine
63		Cutter Rotation
	0-255	Cutter Rotation
64		Cutter Rotation Fine
	0-255	Cutter Rotation Fine
65		reset
	0-24	empty
	25-26	Fan Mode: Auto
	27-28	empty
	29-30	Fan Mode: Silent
	31-44	empty
	45-49	Dimmer Curve: Square
	50-54	Dimmer Curve: Linear
	55-58	Dimming Frequency: 1K
	59-62	Dimming Frequency: 2K
	63-66	Dimming Frequency: 16K
	67-69	Dimming Frequency: 25K
	70-79	empty
	80-84	Full Reset
	88-90	Color Reset

	91-93	Gobo Reset
	94-96	Empty
	97-99	Other Reset
	100-255	Empty

11. Trouble Shooting

Listed below are a few common problems that you may encounter, with solutions.

Unit does not work, No light output and the fan does not work;

1.Check the power connection and main fuse.

2.Detects the mains supply voltage at the connector.

Not responding to DMX Control;

1.Check the DMX connectors/cables to see if they are linked prop- erly.

2.If the DMX LED is on and no response to the channel, check the address settings and the DMX controller polarity.

3.Try using another DMX controller.

4.Check to see if the DMX cables run near or run alongside to high voltage cable. It may cause damage or interference to DMX interface circuit.

5.Please change to another DMX console

One of the channels is not working well;

1.The stepper motor might be damaged or the cable connected to the PCB is broken.

2.The motor' s drive IC on the PCB might be out of condition.

12. Cleaning

Regularly clean the outside of the optical lens focusing on the dust. Based on the number of LEDs use a clean environment to determine: Are they moist, smoked or is the surrounding environment particular-ly dirty, which can cause dust deposition LED.

Please use a glass cleaning solution and a soft cloth to wipe the focusing optical lens. Carefully dry each part. At least 20 days to clean the dust outside a lens, the lens inside 30-60 days to clean up the dust once. Regular inspection LED fan and bottom case fan, a fan of at least 20\days to clean up dust deposition.

Cleaning must be executed in case of power failure.
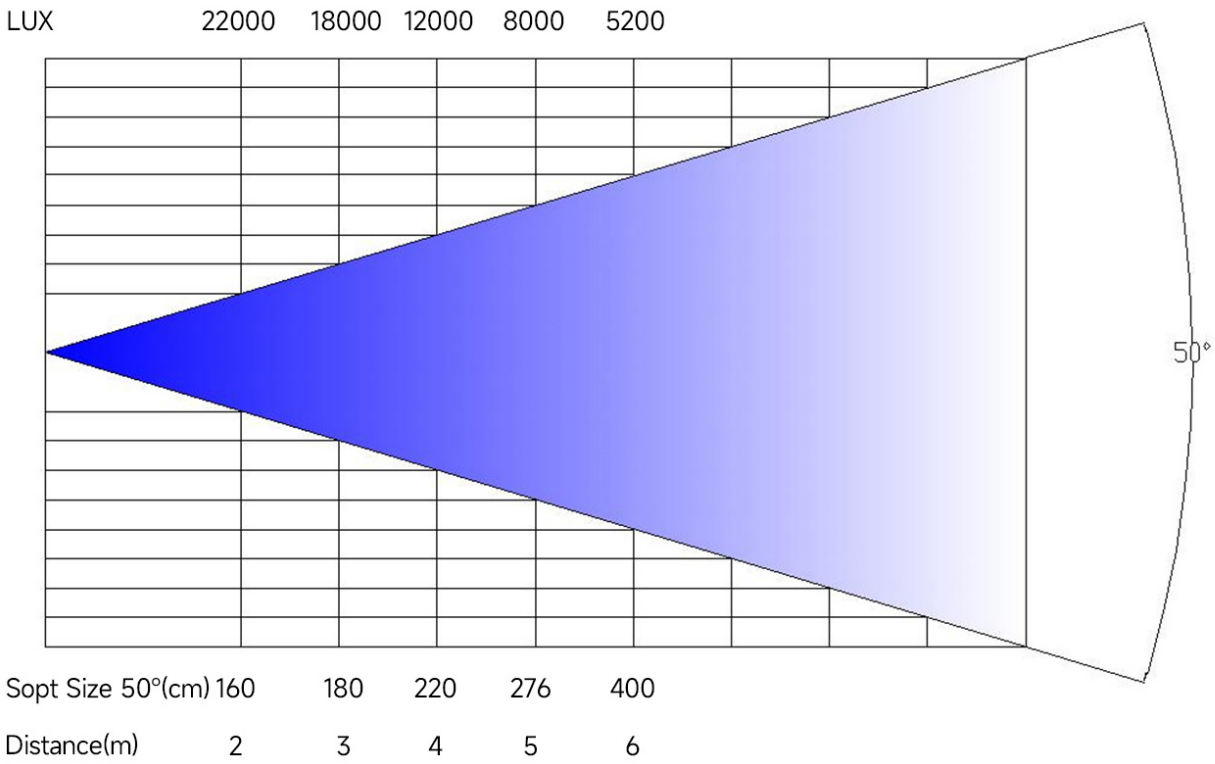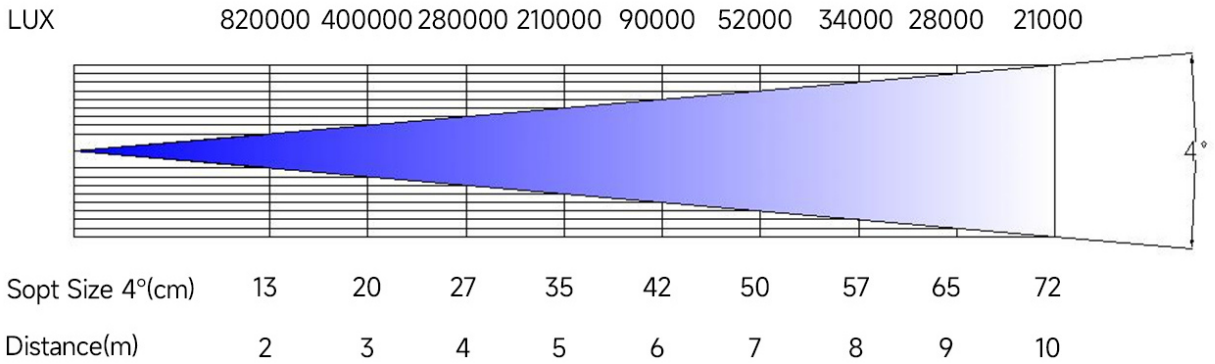
13. Photometrics Diagram